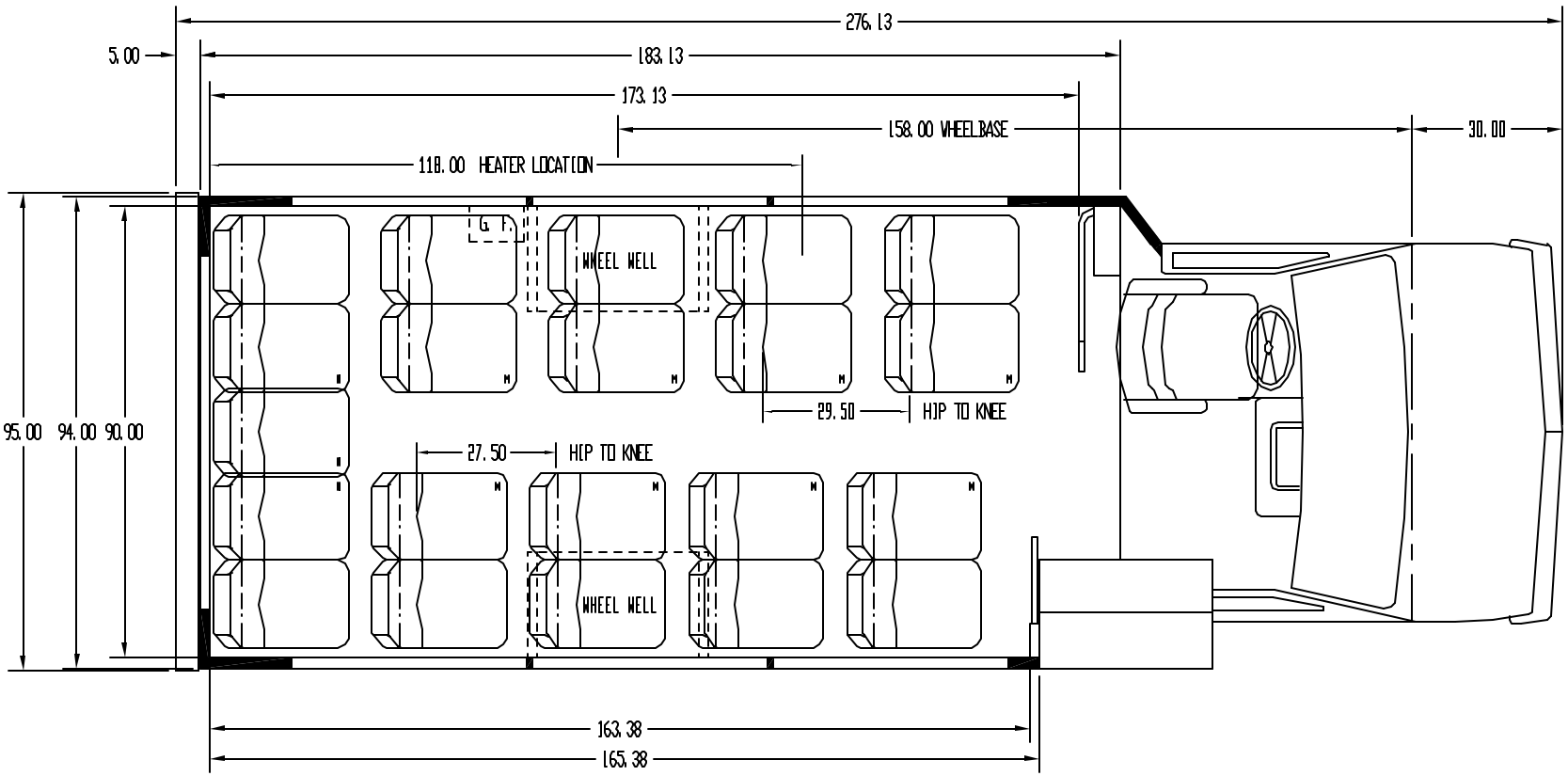

REV	DATE	ECN	DESC. OF CHANGES	BY	APP'D
B	12/29/99		REMOVED A/C COVERS	PR	
A	10/21/99		ADDED A/C COVERS, ADJUSTED HIP TO KNEE, ADDED PARCEL RACK & FLOOR	PR	

PART NO. CB020001

CHAMPION BUS INC.
a THOR company

ECN # N/A

DO NOT SCALE

MATERIAL: FREEDMAN SEATS - MID HIGH FEATHERWEIGHT

PURCH./MFG.: MFG.

TOLERANCES UNLESS OTHERWISE NOTED
.XX = .05
.XXX = .020
X° = 1°

DRAWN BY: M MOSHER

DATE: 06/10/99

CHK.

DATE:

SCALE:

APP'D

DATE:

TITLE: FLOORPLAN CH-230
158" W/B
(21) PASSENGERS

MODEL: CHALLENGER

C:\ACAD DRAWING\CB FLOORPLANS 2000\cb020\CB020001.dwg, 11/16/2004 1:00:48 PM